# MDS COMPACT DISC PLAYER

# DP-470




Accuphase Laboratory, Inc.

Since launching the “DP-80/DC-81” separable CD player in 1986, Accuphase has been engaged in research and development of digital playback technology for nearly 40 years, bringing numerous CD players to market.

The newly announced DP-470 is the successor to the DP-450, which was released in 2021. This unit not only delivers higher-quality CD playback but has also evolved to meet the needs of today’s digital audio environment through enhanced USB DAC functionality and a revised circuit design.

The DP-470 brings out the full potential of CDs. It is a next-generation CD player that allows you to enjoy a wide variety of digital audio sources and provides high-fidelity playback of the CD collections owned by audiophiles.

# Dimension and weight

- Same unit dimensions as the former model




Accuphase Laboratory, Inc. 2

The DP-470 has the same unit dimensions as the former model DP-450.

# Internal view




Accuphase Laboratory, Inc. 3

DP-470 is applied the systematical layout. Each circuit block is logically placed to make the signal path short as possible.

The digital circuit is on the right side and the analog circuit is on the left side at the rear panel.

Additionally, the disc tray features a beautiful champagne gold color, exuding an elegant atmosphere with its smooth and effortless operation.

# Chassis structure

- A highly reliable drive mechanism that ensures stable operation
- Improved playability with the high-performance elastic damper

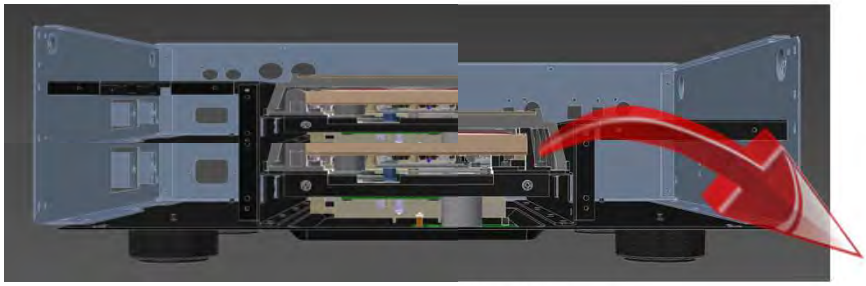

Chassis with a low center of gravity

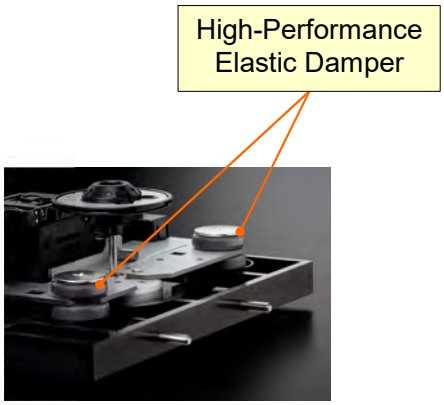


CD Optical Unit

Accuphase Laboratory, Inc. 4

The strong integrated chassis structure that supports the CD drive mechanism adopts the 2 pieces structure.

This enhanced chassis rigidity helps to improve the anti-vibration and vibration damping performance.

In addition, the high-performance elastic damper that secures the CD pickup module absorbs unwanted vibrations from the pickup, contributing to improved playability.

# Power Supply

- Power transformer with Separate Analog and Digital
- A low-noise discrete power supply is used for the analog section




DAC Assembly



The current supplied by the power transformer is completely isolated between the analog and digital circuits, eliminating any mutual interference caused by noise or other factors.

The power supply used in analog circuits consists of independent, discrete components and provides the circuit with pure, noise-filtered current.

# D/A converter

- MDS+(Multiple Delta Sigma +) D/A conversion system
  - 4 parallel D/A converters per channel
  - ES9026PRO 32bit Hyper Stream II 8-channel DAC
- Direct Balanced Filter
  - Balanced connected independence post low pass filter



ES9026PRO SABRE DAC

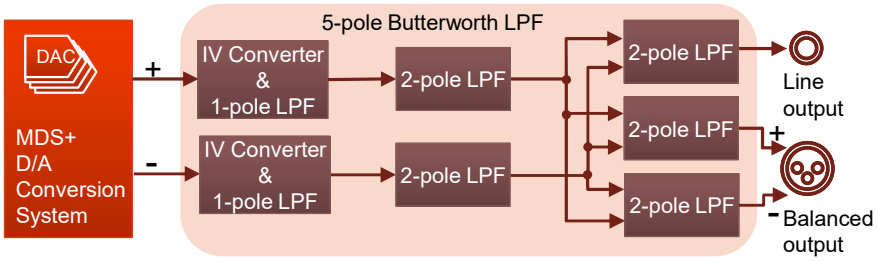


Accuphase Laboratory, Inc. 6

For D/A converter section, DP-470 uses the ESS Technology's 32bit Hyper Stream Ⅱ DAC ES9026PRO .

ES9026PRO has 8 DACs inside, and DP-470 uses 4 DACs connected in parallel per channel with Accuphase's unique technology, Multiple Delta Sigma + conversion system.

Fully-balanced structure is employed in DP-470.

In addition, the independent low pass filter is installed for each audio output(Direct Balanced Filter), thanks to this, the sound signals from all the outputs become high quality.

# Ultra low noise

- 11% lower than the former model
  – Guaranteed output noise: 2.5μV (S/N ratio: 120dB)

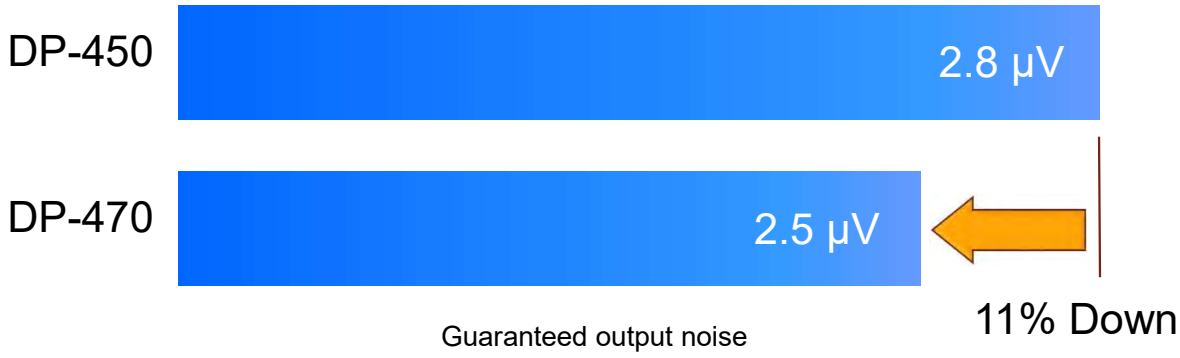


Accuphase Laboratory, Inc. 7

Ultra Low Noise is one of the main technical features of DP-470.

DP-470 guarantees 120dB Signal to Noise ratio which means 2.5μV of output noise voltage.

The former model, DP-450 still shows the excellent noise performance, however, DP-470 achieves 11% lower output noise voltage than DP-450.

# Ultra low THD+Noise

- Actual THD+Noise is lower than the former model

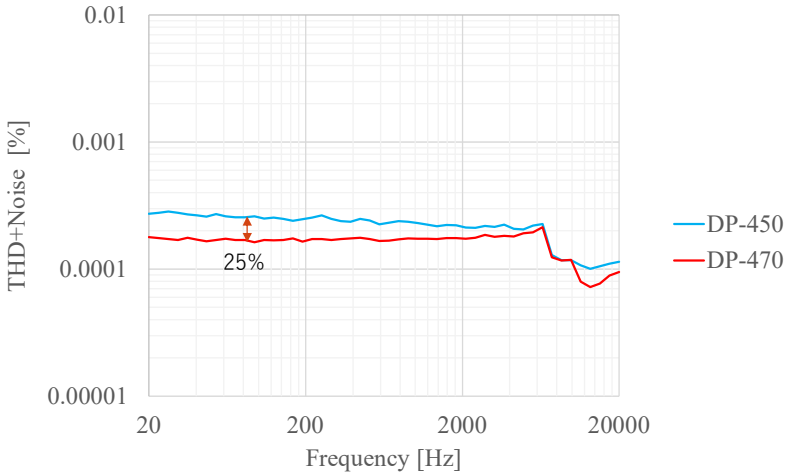


Total Harmonic Distortion + Noise vs Frequency



DP-470 proves itself the great Total Hermonic Distortion(THD) + Noise characteristics which are quite important for music playback.

This graph clearly shows that the DP-470 has THD+noise performance that is approximately 25 percent lower than that of the DP-450 across the entire frequency range.

# Technology for ultra-low noise

- Ideal component layout with separate digital and analog circuits

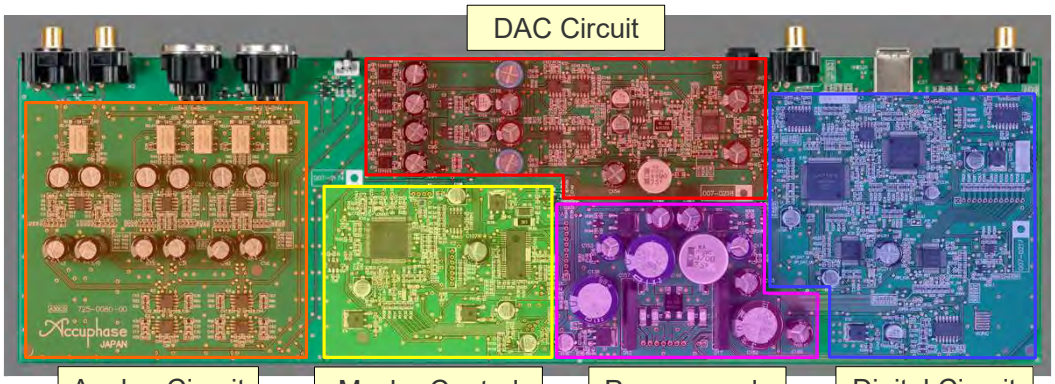


DAC Assembly

Accuphase Laboratory, Inc. 9

To achieve ultimate performance, the DP-470 features a completely redesigned component layout and PCB pattern layout. Each individual circuit block is positioned exactly as intended, and all are connected via the shortest possible routes.

These design features are not only effective against external noise but also take heat dissipation into account, significantly contributing to long-term reliability.

# Technology for ultra-low noise

- Installed ANCC Technology for I/V Converter
  - Improve THD+N performance

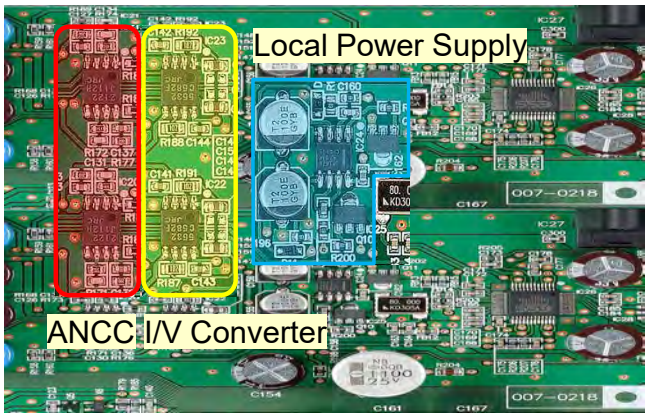


DAC Assembly

Accuphase Laboratory, Inc. 10

The DP-470 incorporates ANCC in the post-filter section of the DAC stage. The circuit constants and configuration were thoroughly reviewed and optimized, which resulted in achieving even greater performance advantages over the DP-450.

ANCC is Accuphase's proprietary technology, employing a feedforward method to cancel minute distortion and noise components generated within the I-V conversion circuit.

# Digital Inputs

- Coaxial INPUT / OUTPUT
  - 192kHz / 24bit
- Optical INPUT / OUTPUT
  - 96kHz / 24bit
- USB-B INPUT
  - 384kHz / 32bit
  - 11.2MHz / 1bit (DoP / ASIO)
  - 22.5MHz / 1bit (ASIO)




Digital Terminals



USB Interface IC



DP-470 has 3 digital inputs, Coaxial, Optical and USB. USB Input accepts 384kHz/32bit-PCM or 22.5792MHz-DSD.

Coaxial and Optical Transport outputs are also available. Transport part and DAC part can work separately. DG-78 can be connected easily between Transport output and Digital input of DP-470.

# Appendix “ANCC”

- ANCC: Accuphase Noise and distortion Canceling Circuit
  - To detect and cancel the noise and distortion at the input stage of I-V converter.

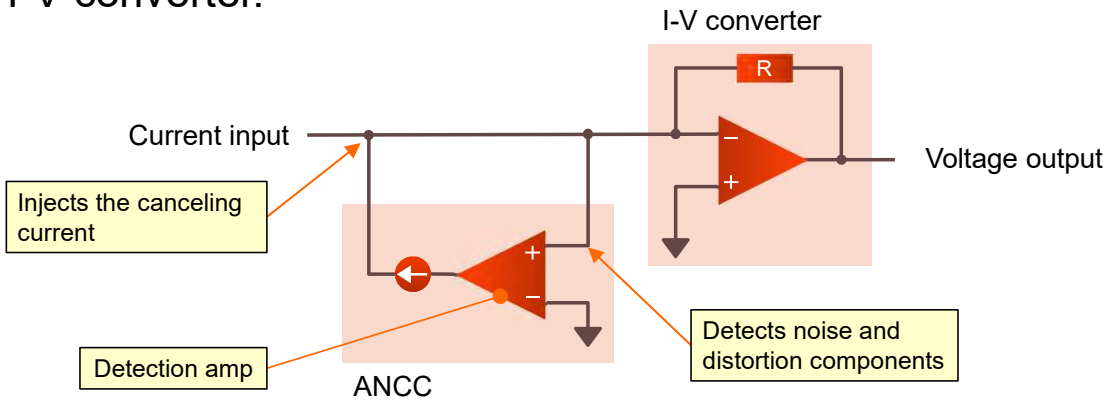


Accuphase Laboratory, Inc. 12

ANCC: “Accuphase Noise and distortion Canceling Circuit” is installed in the I-V converter.

Canceling noise and distortion is realized by detecting the components of noise and distortion at the input stage of an I-V converter module, and also by injecting the canceling current which contains the reversed polarity of those components.